WIND SENSOR with 4-20mA output

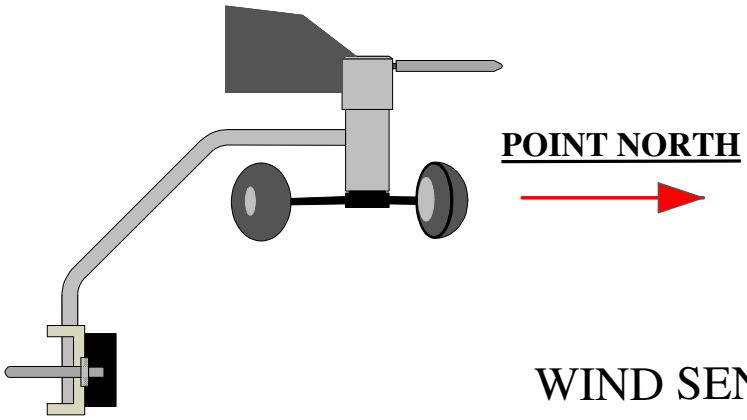

WIND SENSOR

The combined Wind Speed and Direction Sensors are manufactured from anodized aluminium alloy, PVC and stainless steel with moulded polypropylene cups.The units are lightweight (less than 250 grams) yet very robust.

The sensors are designed to be mounted to a mast of between 30 - 50 mm diameter by means of a V -shaped clamp and bracket. This allows simple orientation to North using the compass provided; the only setting up required.

Wind Direction is sensed by a precision conductive potentiometer which combines exceptionally long life with high sensitivity.

Wind Speed is derived from a Hall Effect solid state magnetic switch activated by magnets in the cup rotor running in precision stainless steel ball race (Pro) or sintered bronze bearing (Basic) giving very high sensitivity and very long life.

Specification

WIND SPEED	
Typical accuracy	5% or 1.5 m/s
Resolution	better than 0.5 m/s
Threshold	<0.5 m/s

WIND DIRECTION	
Accuracy	+/- 5 degs. typical (+/- 10 degs. worst case)
Resolution	Generally < 1 deg. (+/- 10 degs. at North)
Threshold	<0.5 m/s

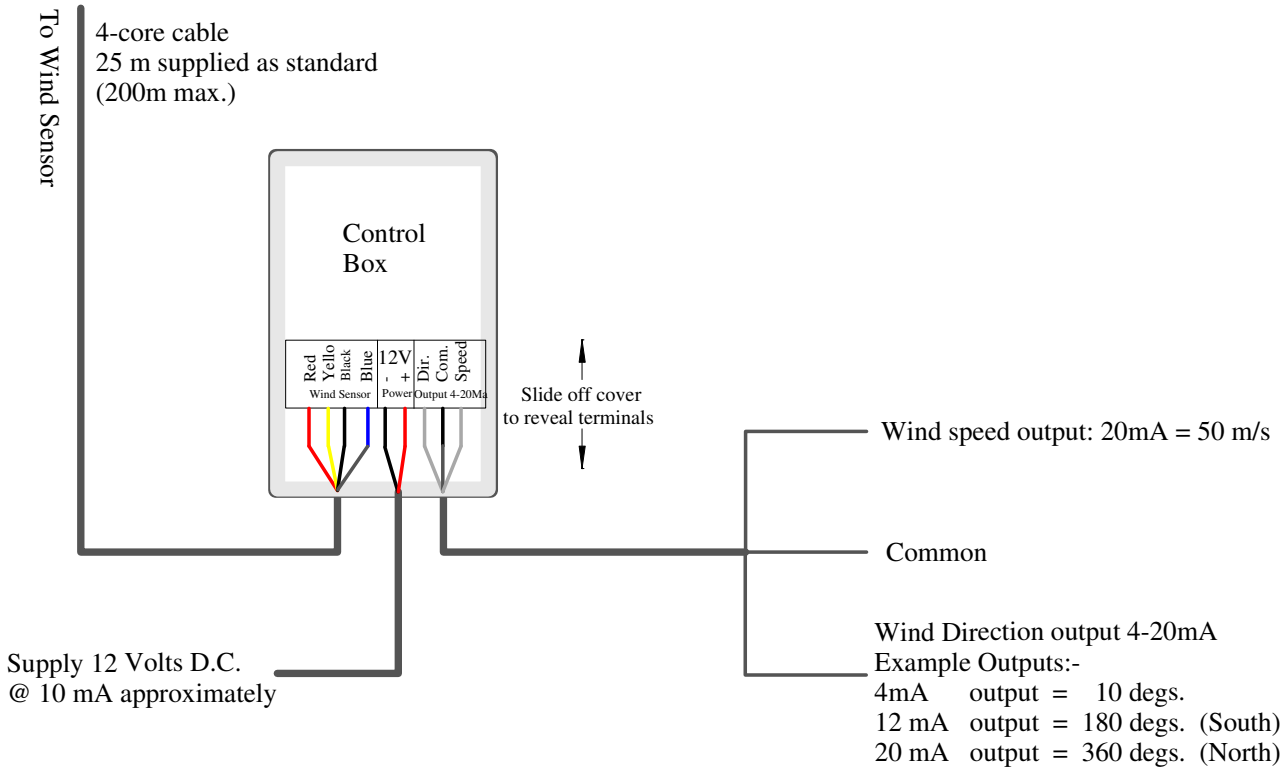

Instromet Weather Systems Ltd.

10a, Lyngate Industrial Estate, North Walsham, Norfolk, NR28 0AJ Tel +44 (01692) 502800 Fax. +44 (01692) 502801 e-mail: sales@Instromet.co.uk
website: www.instromet.co.uk

583 0000 109 Rev. 4 11.08.2010